Single Phase Padmounted Transformers
10-250 kVA

Total customer satisfaction through continual process improvement.

ABB

"Power and productivity for a better world"

Introduction to ABB, Inc.

ABB's history of innovation goes back more than a century and includes many breakthroughs: the world's first three-phase power transmission system; the world's first self-cooling transformer; the world's first high-speed locomotive with a direct drive system; even the world's first synthetic diamond.

This rate of innovation is the main reason ABB is a global leader in power and automation technologies that enable utility and industry customers to improve performance while lowering environmental impact.

ABB is the recognized leader in power technologies. We provide industrial and commercial customers, as well as electric, gas and water utilities, with a broad range of products, services and solutions for power transmission and distribution.

The ABB Jefferson City plant started as a Westinghouse Electric Corporation facility when the product was transferred from the Sharon, PA plant. The first production unit rolled off the line in May of 1972 and Jefferson City has produced over 2 million transformers to date with Ameren (Union Electric) buying the 1 millionth transformer in January of 1990.

The ABB Jefferson City plant has developed numerous engineering design features such as folded fins to cool both single and three phase transformers, a flexible manufacturing system (FMS) line that fabricates the cabinet assemblies for three phase transformers, and an integrated tank line that fabricates the oil compartment for three phase transformers. Many of the fabrication steps on this line are automated; the line consists of an automated storage and delivery system, turret and laser system, a wing bender, ABB welding robots, and an ergonomic material handling system.

Distribution Transformers

You can rely on ABB as the global leader in transformer technology for more than 100 years. Our products, services and professional expertise are unmatched by any other company in the power industry. That is why customers all over the world choose ABB as their partner in delivering reliable and cost-effective energy to their customers.

ABB distribution transformers are uniquely qualified to meet the needs of the Utility, Industrial & Construction, and Energy industries. We are a dominant force in the industry. We lead the way with the introduction of new products and services for the ever-changing distribution transformer industry.

We can offer cost-effective solutions for power distribution. We support our industry with a commitment to product development. We utilize the latest manufacturing technology to maintain state-of-the-art quality and productivity. Extensive vertical integration allows us to ship high quality products in the shortest possible production cycle. We are in alliances with major utilities and businesses around the world providing products and services to meet all their needs.

ABB will continue to build on a heritage of quality, customer satisfaction and technology, and capitalize on its resources, to maintain its position as the number one supplier of transformers in the industry.

Single Phase Padmounted Distribution Transformers provide multi-service options while meeting the reliability and safety requirements of any distribution system. Units may be furnished in various ratings and in a wide range of one-of-a-kind configurations to meet customer needs.

ABB offers submersible transformers for diverse commercial and residential underground applications. Submersible transformers are designed for use in underground vaults to offer flexibility, safety, and easy accessibility for operating personnel. The ABB design can incorporate all of your switching and fusing needs in one unit.

More Value Inside and Out

ABB delivers an unmatched package of added value, from the moment you entrust your purchase order to us. We are focused on delivering value every step of the way – from precise specification conformance to assured on-time delivery, and from efficient performance to effective emergency response.

Those values add up, and this is where ABB Distribution Transformers far exceed the competition – making us your single source for high value distribution products. We have built a heritage of operational excellence and unmatched customer service while delivering unique solutions. By combining high quality materials with our commitment to continual process improvement, we provide custom transformers to meet your specific needs.

Our commitment to reliability is the foundation that assures the longest life-cycle for our transformers. With lower customer life-cycle cost, you have added value in every transformer.

Quality Pays Off

ABB's continual process improvement and vast experience in transformer design and manufacturing assures uncompromising quality and total customer satisfaction. This avoids the problem of installing a transformer only to find it's not working properly, avoiding project delays, cost overruns, and customer dissatisfaction with lack of electrical services.

Manufacturing Technology

ABB Distribution Transformers are manufactured with high quality materials and components which are tested under stringent conditions. This ensures that ABB transformers meet the highest standards anywhere in the world. When specified, we can design our products to handle the harshest environments.

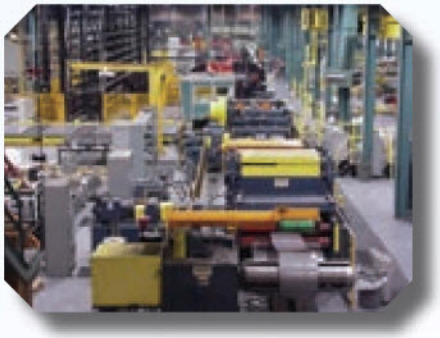

ABB has a rich heritage of technology development and innovation and has pioneered many of the features you see in today's transformers. This includes the introduction of foil windings and wound core technology which significantly increase reliability and safety. Designs are properly adapted to modern manufacturing technologies aimed at maintaining the highest quality standards and keeping costs competitive.

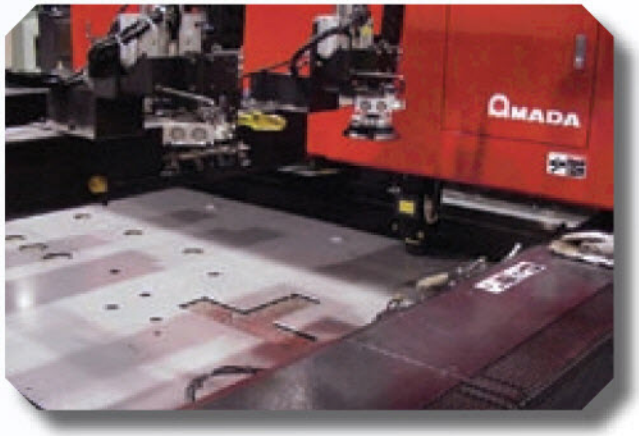

Timely Delivery

You can be assured that we will meet our delivery commitments, be it to current or contracted lead times or in response to emergencies. When we agree on a delivery schedule, we'll make sure your transformers are on site and ready to install.

If transformers arrive too early, they can get in the way on the job site, and if they arrive late it's much worse. ABB makes sure that your padmounted transformers arrive when you need them, so your work can proceed seamlessly.

Distribution Transformer Testing

The ABB commitment to manufacture quality distribution transformers is backed by a series of transformer tests used to verify conformance to performance characteristics outlined in the latest revisions of IEEE C57.12.00 and IEEE C57.12.90. These identified tests are also part of the Quality System which is audited semi-annually by DET NOSKE VERITAS (DNV) to the ISO Standards.

Testing Program

Factory tests are performed on a transformer to confirm that it is properly designed and constructed to carry rated load and that it will withstand the conditions it will be exposed to in service.

Each transformer manufactured by ABB must undergo a series of tests.

1. Polarity, Phase-Relation, and Ratio
2. Demag Test
3. Applied Voltage Test of the HV
4. Applied Voltage Test of the LV
5. Induced Voltage Test
6. No-Load (Excitation) Loss and Excitation Current
7. Impedance Voltage and Load Loss
8. Full Wave Impulse
9. Continuity Check

Test Facilities

The multi-station, automated test facilities are operated by process control computers. Required interaction with test floor personnel is minimal with the computers initiating and monitoring each test, and then analyzing the test results feedback. The computers are programmed to conduct tests according to IEEE standards, and according to the ratings of each transformer style, the test floor computers will initiate appropriate test setups, compare results with established IEEE standard limits, and determine acceptance for each tested unit.

The test results for each unit are recorded and stored on computer files for access and analysis.

Polarity, Phase-Relation, and Ratio Tests

These tests verify proper phase-relation (three phase), ratio, and polarity (single phase) of the transformer under test. To pass, a unit must demonstrate the proper polarity or phase-relation and have a turns ratio within one-half of one percent of the nominal voltage ratio.

Demag Test

Some transformers require the Demag Test to remove any residual magnetism in preparation for an impulse test. It also serves as a no-load exciting current test. A transformer passes this test if the exciting current does not exceed the limit specified for the design of the transformer.

Applied Voltage Test of the HV

This test checks the dielectric integrity of insulation structures between the high voltage and low voltage, and between the high voltage and ground. A pass/fail decision is made by monitoring the test current intensity. If the resulting current is larger than specified normal leakage and capacitive currents, the unit is rejected. This test is omitted for transformers with a permanently grounded high voltage winding.

Applied Voltage Test of LV

This dielectric test is similar to the Applied Voltage test of the high voltage circuitry except that the integrity of insulation structures between the low voltage and the high voltage, and between the low voltage and ground is checked. A pass-fail decision is made by monitoring the test current intensity. If the resulting current is larger than specified normal leakage and capacitive current, the unit is rejected.

Induced Voltage Test

The principal purpose of this test is to verify the dielectric strength of turn to turn, layer to layer, phase to phase, and other insulation structures within the transformer windings by inducing an overvoltage condition (at higher than normal frequency to avoid saturation of the core). The test current is monitored, and if it exceeds limits specified for each transformer, the unit is rejected.

No-Load Loss and Excitation Current

This test measures the no-load (excitation) loss and the transformer exciting current with rated voltage applied. If the exciting current and/or the no-load loss exceed the limits specified, the transformer is rejected.

Impedance Voltage and Load Loss

This test measures the load loss and the impedance voltage at rated current. The load loss and the impedance voltage must be within specified limits.

Full Wave Impulse

The impulse test is one of several tests designed to verify the dielectric strength of the many insulation structures within the distribution transformer against line voltage surges. It is performed to comply with IEEE standards and for quality assurance. The change in the IEEE standard in 1993 required all manufacturers to install fault detection sensitive enough to detect a single turn short.

Continuity Check

This test is performed on all transformers to verify transformer circuit and component integrity. This test is performed with an ohmmeter to verify that the internal wiring is correct.

The transformer's nameplate is compared to manufacturing information for style, serial number, kVA, HV rating, LV rating, tap voltages, impedance, conductor materials and coil BIL rating. The bushings, electrical accessories, and fuses are verified.

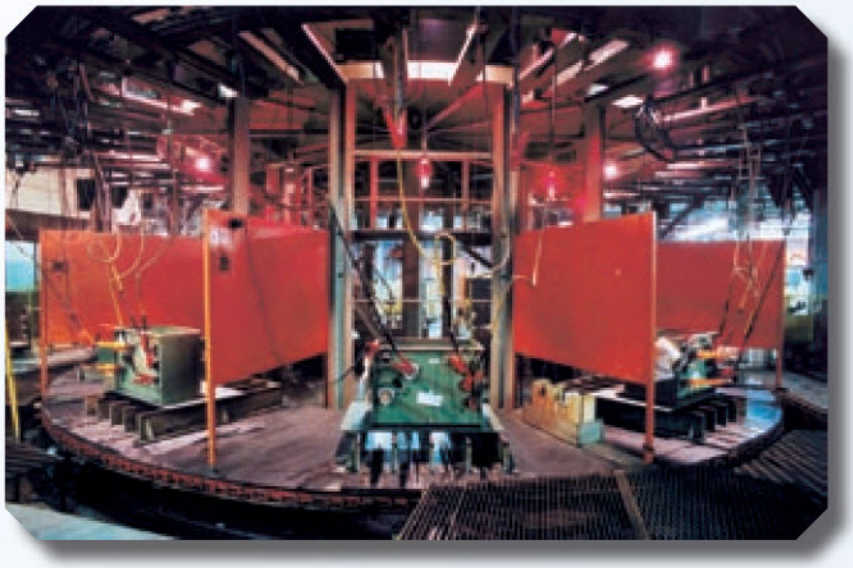

Special Tests

Some tests are performed at the option of the customer.

Sound Testing

IEEE standards define the required sound levels for transformer but some customers specify reduced sound levels. The sound generated by a transformer is affected by the core geometry, flux density, tank design, and the quality of assembly of all the transformer components into a completed unit. Sound tests are made with the unit powered at 100% and 110% of rated voltage under no-load conditions.

Temperature Tests

Core losses and coil losses are the primary sources of heating within the transformer. Our transformers are guaranteed to have an average coil winding temperature of no more than 65° C rise over ambient air temperature when operated at rated voltage and load conditions.

The temperature test is performed to determine the thermal characteristics of the transformer and to verify that they are within design limits.

Calibration

Test equipment is calibrated on a scheduled basis by trained technicians. Calibration records are maintained in accordance with the Quality System procedures. These are audited semi-annually by DNV in accordance with ISO Standards.

Short Circuit Withstand Capabilities

Distribution transformers are subjected to external short circuits on the secondary side. Such external faults can develop on the service line, in the house wiring or in connected loads due to numerous environmental reasons. These faults can be line-to-ground, double line-to-ground or line-to-line.

To meet these operating conditions, the American National Standard Institute (IEEE) has set standards concerning short circuit withstand capability. These standards require that distribution transformers shall be designed and constructed to withstand the mechanical and thermal stresses produced by these external short circuits.

The current standards relating to short circuit strength are IEEE C57.12.00 which sets the short circuit withstand requirements for distribution transformers and IEEE C57.12.90 which provides procedures for short circuit testing.

For distribution transformers, the magnitude of the short circuit current, the numbers of short-circuit tests and the duration of each short circuit test are defined by IEEE standards as follows.

A. Magnitude

Category	Single Phase kVA	Three Phase kVA	Withstand Capability*
I	5-25	15-75	40
	37.5-100	112.5-300	35
	167-500	500	25
II		750-2500	$1/Z_{T**}$

*Base current (Symmetrical) per unit for all distribution transformers with secondary rated 600 V and below.

**The short circuit current will be limited by the transformer impedance only.

B. Number of Tests

Each phase of the transformer shall be subjected to a total of six tests, four with symmetrical fault currents and two with asymmetrical fault currents.

C. Duration of Short Circuit Tests

When short circuit tests are performed the duration of each test shall be 0.25 s except that one test satisfying the symmetrical current requirement shall be made for a longer duration on distribution transformers. The duration of the long test in each case shall be as follows:

Category I:

$$T = 1250/I^2$$

Where T is the duration in seconds,

And $I = I_{sc}/I_R$ = symmetrical short circuit current, in multiples of normal base current except I shall not exceed the maximum symmetrical current magnitudes listed in A.

Where $I_{sc} = I_R/Z_T$ = symmetrical short circuit current, in rms amperes

I_R = rated current on the given tap connection, in rms amperes

Z_T = transformer impedance on the given tap connection in per unit on the same apparent power base as I_R

Category II:

$$T = 1.0 \text{ second}$$

Criteria of Satisfactory Performance

According to IEEE Standards a unit is considered to have passed the test if it passes a visual inspection and dielectric tests. Recommended additional checks include examination of wave shape of terminal voltage and current, leakage impedance measurement and excitation current test. (Refer to IEEE C57.12.90.)

The standard allows the following variations in the leakage impedance:

Z_T (Per Units)	Percentage Variation
0.0299 or less	22.5-500 (Z_T)
0.0300 or more	7.5

Z_T = per unit impedance of the transformer

Paint Finish Process

ABB utilizes a multi-step process to apply a corrosion resistant finish to transformers. The materials and processes used are designed to protect against the effects of abrasion, sunlight, rural and industrial atmospheres, and humidity. Each carefully controlled process step has a specific purpose, and each step builds on the previous steps to form the complete protection system that ensures that our transformers meet IEEE functional paint specification guidelines.

Paint Process Procedure

Transformer parts receive the following steps of surface preparation prior to painting.

1. Abrasive cleaning: All parts are cleaned or prepped to remove welding by-products and provide more consistent adhesion and corrosion protection.
2. Alkaline wash cleaner: Removes mill oils, drawing oils, and shop soils that could interfere with good adhesion.
3. Water rinse.
4. Iron phosphate coating: Provides a firm anchor for good paint adhesion and provides resistance to underfilm corrosion should the paint film be damaged, exposing bare metal.
5. Water rinse.
6. Deionized water rinse: Removes any ionic contamination to prepare for first application of paint.

The entire cleaning and pretreating process is automatic and conveyorized with all chemicals applied by spray. The pretreatment system combines the latest in cleaning technology such as DI rinses and iron phosphate over abrasive cleaning in a tried and true format to provide the best possible pretreatment before paint is applied.

One of the keys to effectiveness of the ABB paint finish system is the primer. The green epoxy primer is applied by cationic electrodeposition – a dip process in which positively charged primer particles are attracted to grounded parts (cathodes). This method applies a very uniform, pinhole-free coating which penetrates and thoroughly coats all parts. This is a highly effective process for coating parts with difficult geometry. The process utilizes practically 100% of the primer paint, and since the primer is water borne OSHA and EPA emission standards are met. The primer is free of lead and chrome. After rinsing, parts are cured in an oven in preparation for the next step.

After the transformer is assembled, a final coating of two-component urethane paint is spray applied for color and additional film build. The final coat provides the weatherability necessary to protect the unit from sunlight and maintain its appearance.

Summary

The ABB paint system utilizes advanced techniques and materials to provide a superior finish system on padmounted distribution transformers. Each step in the process is specifically designed to maximize finish performance while minimizing waste to provide the best possible combination of performance.

Paint Finish Specifications and Test Results

Parameter	Test Method	Specification	Typical ABB Value
Total exterior film build	Elcometer 456 Basic F	Not specified by IEEE	2-4 mils
Adhesion	ASTM D3359 Method A or B	100%	100%
Humidity 1000 hrs.	ASTM D4585 @45c	No blisters, up to 1 pencil hardness change per ASTM D3363	No blisters, no softening
Impact, 80 InLb	ASTM D2794/ ASTM B117	No red rust after 24 hrs.	No red rust after 24 hrs.
Oil resistance	Immerse in 100c Oil for 72 hrs.	No loss of adhesion per ASTM 3359, no blisters, no streaking, up to 1 pencil hardness change per ASTM D3363	No loss of adhesion, no blisters, no streaking, no change in hardness, color or gloss
QUV, 500 hrs.	ASTM G53/D523	50% loss of gloss, no cracks, no crazing	40% loss of gloss, no cracks, no crazing
Abrasion, 3000 cycles	ASTM D4060 24 hrs.	No red rust after 24 hrs.	No red rust after 24 hrs.
Gravelometer, 60 PSI	ASTM 3170/ SAE J400	After 24 hrs. red rust in chips to not exceed 4B rating	4A (better than 4B)
QUV/SCAB, 15 cycles	ASTM G53	6 rating per ASTM D1654, no blisters	6 rating per ASTM D1654, no blisters

Paint meets or exceeds IEEE C57.12.28 and EEMAC Y1-2, Canadian Standard.

Individual product specification sheets located in folder.

Pad-Pak Padmounted Switching Units

An oil-filled padmounted sectionalizing, tapping and fusing device suited for diverse applications.

The Pad-Pak can be furnished in a complete line of ratings and in a wide range of configurations to meet the reliability, safety and operating requirements of any distributions system. It is available in either live front or dead front construction. It is available in 1, 2, or 3 pole ratings, depending on the configuration.

Ratings
200A continuous

Voltages:

4160Y/2400-34500Y/19920

95, 125 and 150 KV BIL

The Pad-Pak meets the following industry Standards:

IEEE C37.72 IEEE C57.12.00
IEEE C57.12.28

Standard Features

1. The Pad-Pak is equipped with 200A externally replaceable universal bushing wells. Parking stands are located near each bushing for attachment of bushing accessories.
2. Each Pad-Pak includes a flip-top hood with heavy-duty 3/8" thick removable stainless steel hinge pins to provide safe and durable service.
3. A recessed locking assembly containing padlock provisions and a locking bolt is standard for tamper-resistant operation. Specify penta-head or hex-head bolt.
4. All tanks are constructed of heavy gauge steel. All tank seams are welded, and every unit is inspected and pressure-tested for leaks before shipment. In addition, all Pad-Paks are supplied with:

   a. 5/8" – 11 stainless steel lifting bosses
   b. 1/2" Oil level plug
   c. Self-actuating pressure relief device in 1/2" oil fill plug
   d. 1/2" Oil drain plug
   e. Ground bosses

The fully adjustable and removable sill is provided with cleats for anchoring the sill to the pad.

Tamper-resistant design that exceeds IEEE C57.12.28.

Each unit receives the same metal treatment and paint finish as padmounted transformers. This consists of a multi-step process:

a. Alkaline cleaning and zinc phosphate coating

b. Epoxy primer uniformly applied by cationic electrodeposition
c. Two-component urethane top coat for added UV protection. Color is Munsell 7GY/3.29/1.5 green.

Corrosion resistant nameplate with schematic diagram.

Optional Features

1. Overcurrent Protection: mounted in a dry well loadbreak canister; sealed to prevent condensation.

   Voltage Class 8.3, 15.5, 23 KV
   Fuse Type CX, CLT, NX

2. Switching:

   a. Externally operated loadbreak oil rotary (LBOR) switch

   Continuous current 300A

Loadbreak	300A @ 25 KV
Loadbreak	200A @ 38 KV
Momentary	10,000A RMS Sym.
Fault Close	10,000A RMS Sym.

   Impulse 125, 150 Kv BIL
   Voltage Class 25, 35 KV

3. Primary Connection:

   a. 200A universal bushing wells and loadbreak inserts
   b. Integral (one piece) 200A loadbreak bushings
   c. 200A universal bushing wells and nonloadbreak inserts
   d. Integral (one piece) 200A non-loadbreak bushings
   e. 300A porcelain bushings

4. Miscellaneous:

   a. NEMA safety label per NEMA publication 260-1982

ABB

Design Dimensions and Weights

(All weights and dimensions are approximate. Dimensions may change to meet specific customer requirements. Weights are in pounds.)

Nameplate Information

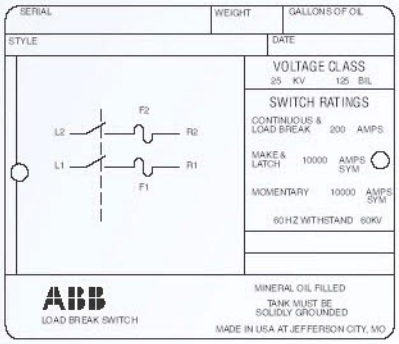

Recommended Pad Dimensions

1. Single End Designs

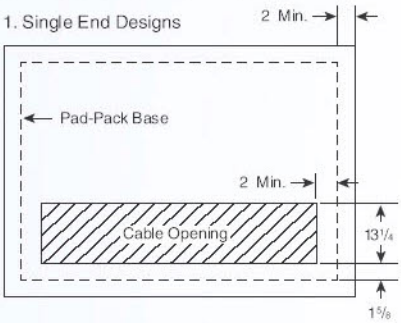

Drawing	Schematic	Front View	KV BIL	H	W	D②	Weight
Single Phase							
1			95 125 150	24" 24" 24"	24" 24" 24"	33.3" 36" 36"	475 480 480
2			95 125 150	24" 24" ①	24" 24" ①	37.8" 46.3" ①	560 680 ①
3			95 125 150	24" 24" 24"	36" 36" 36"	33.3" 36" 36"	670 680 680
4			95 125 150	24" 24" 24"	36" 36" 36"	33.3" 36" 36"	670 680 680
5			95 125 150	24" 24" ①	40" 40" ①	37.8" 46.3" ①	870 1060 ①
6			95 125 150	24" 24" ①	36" 36" ①	37.8" 46.3" ①	795 965 ①
7			95 125 150	24" 24" 24"	36" 36" 36"	33.3" 36" 36"	670 680 680
8			95 125 150	32" 32" 32"	44" 44" 44"	33.3" 36" 36"	1090 1100 1100
9			95 125 150	32" 32" ①	44" 44" ①	37.8" 46.3" ①	1290 1565 ①
Three Phase							
10			95 125 150	32" 32" 32"	40" 40" 40"	39.8" 42.5" 42.5"	1265 1275 1275
11			95 125 150	32" 32" ①	44" 44" ①	39.8" 46.3" ①	1390 1565 ①

① Contact Division for availability.
② Overall Depth. Hood depth at 95 KV BIL is 16.5", at 125 and 150 KV BIL is 19.5".

MTR Micro-Pak Single Phase Padmounted Transformer

A single phase, single service, low profile distribution padmount transformer available in loop or radial feed.

Designed to aesthetically, safely and economically provide underground electrical service to single loads, particularly, rural residences, farms and ranches.

The Micro-pak meets the following industry standards:
ABB padmounted distribution transformers meet the following industry standards:

IEEE C57.12.00	IEEE C57.12.80
IEEE C57.12.25	NEMA TR-1
IEEE C57.12.28	WUG 2.13, Rev. 4
IEEE C57.12.29	IEEE C57.91
IEEE C57.12.70	IEEE C57.12.90

Ratings @ 65º C Rise:

kVA:	10, 15, 25, 37-1/2, 50
HV:	4160GY/2400 through 24940GY/14400V
BIL:	60, 75, 95, 125 kV
LV:	240/120, 120/240, 480/240,240/480, 277 V

60 hertz standard, 50 hertz optional

Standard Features:

1. Equipped with two universal high voltage bushing wells for loop feed. (Only one bushing well is provided for radial feed.)
2. A flip-top hood and heavy duty 3/8", removable stainless steel hinge pins provide safe and durable service.
3. A recessed locking assembly with padlock provisions and a penta-head locking bolt is standard for tamper-resistant operation. A hex-head locking bolt is available.
4. All tanks are constructed of heavy gauge steel. Tank seams are welded and each unit is pressure tested and inspected for leaks prior to shipment. In addition, all single phase transformers are supplied with:
   a) 5/8" -11 stainless steel lifting bosses
   b) Oil level/fill plug
   c) Oil drain plug
   d) Self-actuating pressure relief device
   e) Two ground bosses, 1/2" -13 NC tapped hole, 7/16" deep
5. The front sill latches with the flip-top hood, is attached on the side of the tank and is removable.
6. The high voltage universal bushing wells are externally clamped and removable. A parking stand between the bushing wells is provided for attachment of bushing accessories.
7. Externally clamped low voltage bushings with contact nuts.
8. Tamper-resistant design that exceeds IEEE C57.12.28.
9. NEMA safety labels.
10. Nameplate.
11. The paint finish process applies a durable, corrosion resistant finish to the product. The multi-step process includes an epoxy primer uniformly applied by cationic electrode position and a urethane top coat.

Optional Accessories:

Overcurrent Protection

- An internal primary protective link to remove the transformer from the system in the event of an internal fault.
- An oil-immersed bayonet-type fuse link to remove the transformer from the system in case of an internal fault (fault sensing) or secondary short or overload (overload sensing). This fuse is a drawout design and is supplied in series with an isolation link. An optional drip plate is provided to prevent oil from dripping onto the bushing or elbow.

Primary Connection

- Universal bushing wells (standard) and loadbreak inserts
- Integral (one-piece) loadbreak bushings

Secondary Connections

- Copper studs with contact nuts (standard)
- Copper studs with rotatable spades
- Four-hole, NEMA type, tin-plated copper alloy spade
- Four-hole, in line, tin-plated copper alloy spade
- Cable lead secondary

Miscellaneous

- Cleats for anchoring sill to pad
- Polypad mounting base
- Stainless steel transformer (304 or 400 CB)
- Stainless steel ("Mini-Skirt") at base of carbon steel tank
- Conduit hole
- Provisions for fault indicator

Minimum/Maximum Design Dimensions

(Actual dimensions will vary according to voltage, loss evaluation, and accessories.)

MTR	A	B	C	D
Min.	24	24	30.5	14.25
Max.	26	24	35.5	16.25

Design Dimensions:

(All dimensions are approximate. Dimensions may change to meet specific customer requirements. Dimensions are in inches.)

Front View

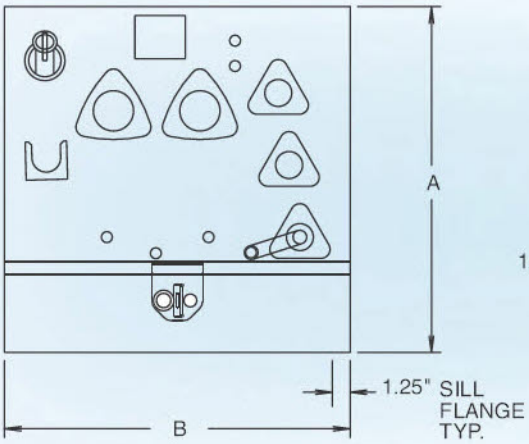

Side View

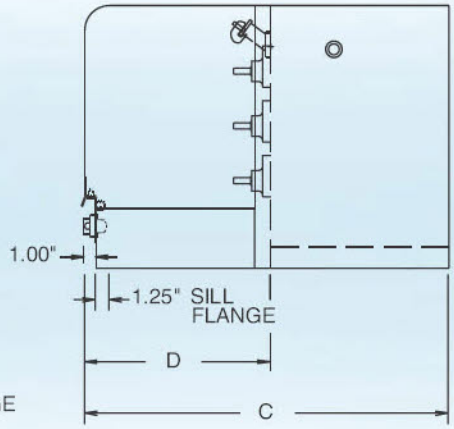

Recommended Pad Dimensions

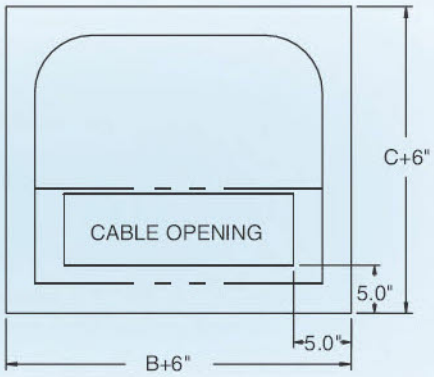

MTR Mini-Pak Single Phase Padmounted Transformer

A single phase, multi-service, low profile padmounted transformer.

The Mini-Pak is designed for cross feed (Type 2) loop feed or radial feed on a grounded wye, underground distribution system. It can be furnished in a complete line of ratings and in a wide range of configurations to meet the reliability, safety and operating requirements of any distribution system.

The Mini-Pak meets the following industry standards:

IEEE C57.12.00	NEMA TR-1
IEEE C57.12.25	WUG 2.13, Rev. 4
IEEE C57.12.28	IEEE C57.12.29
IEEE C57.12.70	IEEE C57.12.80
IEEE C57.12.90	IEEE C57.91

Ratings @ 65º C Rise:

kVA:	10, 15, 25, 37-1/2, 50, 75, 100, 167
HV:	4160GY/2400 through 34500GY/19920V
BIL:	60, 75, 95, 125 kV
LV:	240/120, 480/240, 277 V

60 hertz standard, 50 hertz optional

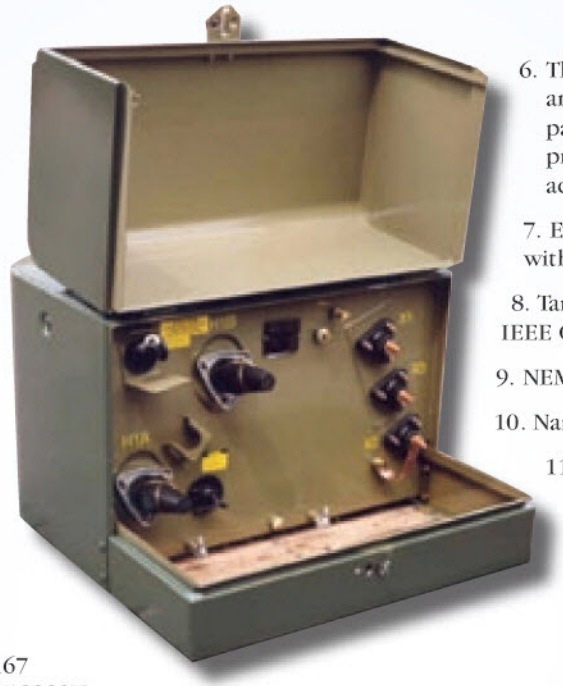

Standard Features:

1. Equipped with two universal high voltage bushing wells for loop feed. (Only one bushing well is provided for radial feed.)
2. A flip-top hood and heavy duty 3/8", removable stainless steel hinge pins provide safe and durable service.
3. A recessed locking assembly with padlock provisions and a penta-head locking bolt is standard for tamper-resistant operation. A hex-head locking bolt is available.
4. All tanks are constructed of heavy gauge steel. Tank seams are welded and each unit is pressure tested and inspected for leaks prior to shipment. In addition, all single phase transformers are supplied with:
   a) 5/8" -11 stainless steel lifting bosses
   b) Oil level/fill plug
   c) Oil drain plug
   d) Self-actuating pressure relief device
   e) Two ground bosses,1/2" -13 NC tapped hole, 7/16" deep
5. The front sill latches with the flip-top hood, is attached on the side of the tank and is removable.
6. The high voltage universal bushing wells are externally clamped and removable. A parking stand between the bushing wells is provided for attachment of bushing accessories.
7. Externally clamped low voltage bushings with contact nuts.
8. Tamper-resistant design that exceeds IEEE C57.12.28.
9. NEMA safety labels.
10. Nameplate.
11. The paint finish process applies a durable, corrosion resistant finish to the product. The multi-step process includes an epoxy primer uniformly applied by cationic electrodeposition and a urethane top coat.

Optional Accessories:

Overcurrent Protection

- An internal primary protective link to remove the transformer from the system in the event of an internal fault.
- A secondary breaker provides protection against secondary overloads and short circuits.
- An oil-immersed bayonet-type fuse link to remove the transformer from the system in case of an internal fault (fault sensing) or secondary short or overload (overload sensing). This fuse is a drawout design and is supplied in series with an isolation link. A drip plate is provided to prevent oil from dripping onto the bushing or elbow.
- A current limiting fuse mounted in a dry well loadbreak canister.
  - The high interrupting rating of the CL fuse permits its use on systems where the available fault current exceeds the ratings of normal expulsion fuses.
  - A partial range current limiting fuse mounted under oil with the transformer tank.
  - An explusion fuse is supplied in series with the partial range CL fuse.
  - Available at 95 and 125 kV BIL

Switching

- Externally-operated tap changer
- Externally-operated dual voltage switch
- Externally-operated loadbreak oil rotary (LBOR) switch

Primary Connection

- Universal bushing wells (standard) and loadbreak inserts
- Integral (one piece) loadbreak bushings

Secondary Connections

- Copper studs with contact nuts (standard)
- Copper studs with rotatable spades
    - Four-hole, NEMA type, tin-plated copper alloy spade
    - Four-hole, in line, tin-plated copper alloy spade

Miscellaneous

- Cleats for anchoring sill to pad
- Stainless steel transformer (304 or 400 CB)
- Stainless steel ("Mini-Skirt") at base of carbon steel tank
- Conduit hole (not available with composite hood)
- Provisions for fault indicator

Minimum/Maximum Design Dimensions

(Actual dimensions will vary according to voltage, loss evaluation, and accessories.)

MTR	A	B	C	D
Min.	24	32	30.5	14.25
Max.	42	44	46.5	19.25

Design Dimensions:

(All dimensions are approximate. Dimensions may change to meet specific customer requirements. Dimensions are in inches.)

Front View

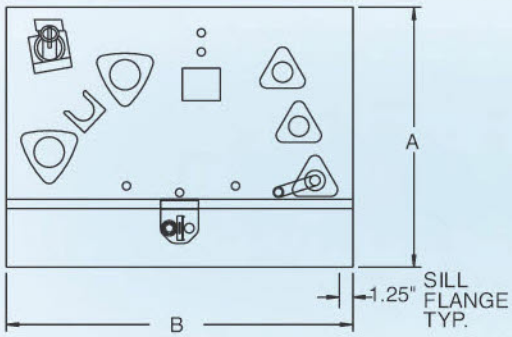

Side View

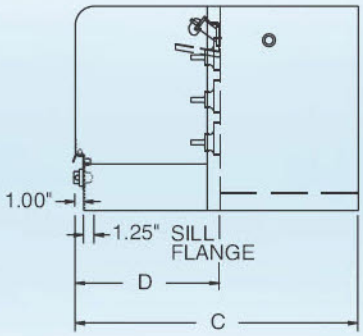

Recommended Pad Dimensions

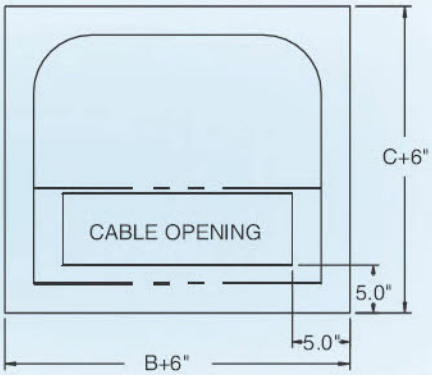

MTR Maxi-Pak Single Phase Padmounted Transformer

A single phase, multi-service, low profile padmounted transformer.

The Maxi-Pak is designed for loop or radial feed on a grounded wye, underground distribution system. It is designed specifically for customers requiring straight-up feed (Type 1) rather than cross feed (Type 2).

The Maxi-Pak meets the following industry standards:

IEEE C57.12.00	IEEE C57.12.80
IEEE C57.12.21 - Live front	IEEE C57.12.90
IEEE C57.12.25 - Dead front	NEMA TR-1
IEEE C57.12.28	WUG 2.13, Rev. 4
IEEE C57.12.29	IEEE C57.91
IEEE C57.12.70	

Ratings @ 65º C Rise:

kVA:	10, 15, 25, 37-1/2, 50, 75, 100,167, 250
HV:	4160GY/2400 through 34500GY/19920V
BIL:	60, 75, 95, 125, 150 kV
LV:	240/120, 120/240, 480/240,240/480, 277 V

60 hertz standard, 50 hertz optional

Standard Features:

1. Equipped with two universal high voltage bushing wells for loop feed. (Only one bushing well is provided for radial feed.)
2. A flip-top hood and heavy duty 3/8", removable stainless steel hinge pins provide safe and durable service.
3. A recessed locking assembly with padlock provisions and a penta-head locking bolt is standard for tamper-resistant operation. A hex-head locking bolt is available.
4. All tanks are constructed of heavy gauge steel. Tank seams are welded and each unit is pressure tested and inspected for leaks prior to shipment. In addition, all single phase trans-formers are supplied with:
   a) 5/8" -11 stainless steel lifting bosses
   b) Oil level/fill plug
   c) Oil drain plug
   d) Self-actuating pressure relief device
   e) Two ground bosses, 1/2" -13 NC tapped hole, 7/16" deep
5. The front sill latches with the flip-top hood, is attached on the side of the tank and is removable.
6. The high voltage universal bushing wells are externally clamped and removable. A parking stand between the bushing wells is provided for attachment of bushing accessories.
7. Externally clamped low voltage bushings with contact nuts.
8. Tamper-resistant design that exceeds IEEE C57.12.28.
9. NEMA safety labels.
10. Nameplate.
11. The paint finish process applies a durable, corrosion resistant finish to the product. The multi-step process includes an epoxy primer uniformly applied by cationic electrodeposition and a urethane top coat.

Optional Accessories:

Overcurrent Protection

- An internal primary protective link to remove the transformer from the system in the event of an internal fault.
- A secondary breaker provides protection against secondary overloads and short circuits.
- An oil-immersed bayonet-type fuse link to remove the transformer from the system in case of an internal fault (fault sensing) or secondary short or overload (overload sensing). This fuse is a drawout design and is supplied in series with an isolation link. A drip plate is provided to prevent oil from dripping onto the bushing or elbow.
- A current limiting fuse mounted in a dry well loadbreak canister.

ABB

- The high interrupting rating of the CL fuse permits its use on systems where the available fault current exceeds the ratings of normal expulsion fuses.

- A partial range current limiting fuse mounted under oil with the transformer tank.
  - An explusion fuse is supplied in series with the partial range CL fuse.
  - Available at 95, 125 and 150 kV BIL

Switching
- Externally-operated tap changer
- Externally-operated dual voltage switch
- Externally-operated loadbreak oil rotary (LBOR) switch

Primary Connection
- Universal bushing wells (standard) and loadbreak inserts
- Integral (one piece) loadbreak bushings

Secondary Connections
- Copper studs with contact nuts (standard)
- Copper studs with rotatable spades
  - Four-hole, NEMA type, tin-plated copper alloy spade
  - Four-hole, in line, tin-plated copper alloy spade
- Cable lead secondary

Miscellaneous
- Cleats for anchoring sill to pad
- Stainless steel transformer (304 or 400 CB)
- Stainless steel ("Mini-Skirt") at base of carbon steel tank
- Conduit hole
- Provisions for fault indicator

Minimum/Maximum Design Dimensions

(Actual dimensions will vary according to voltage, loss evaluation, and accessories.)

MTR	A	B	C	D
Min.	32	32	30.5	14.25
Max.	42	44	46.5	19.25

Design Dimensions:

(All dimensions are approximate. Dimensions may change to meet specific customer requirements. Dimensions are in inches.)

Front View

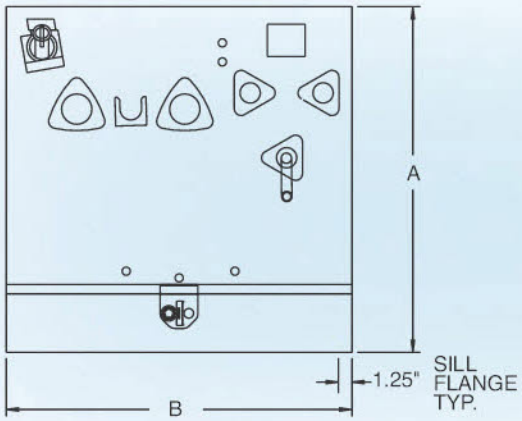

Side View

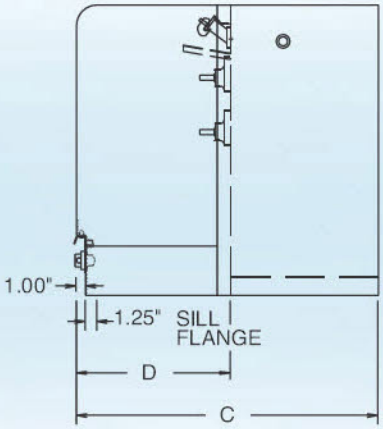

Recommended Pad Dimensions

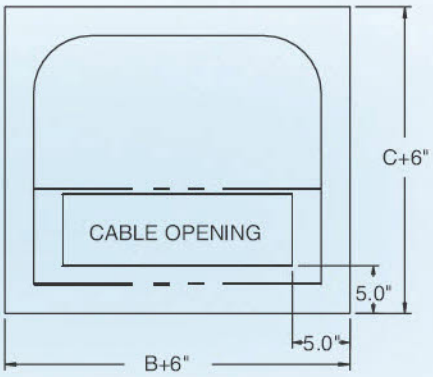

Single Phase Underground Padmounted Transformer

The single phase underground transformer is designed for use on residential underground systems. It is built to withstand environmental conditions common to below-grade and vault-type installations. The transformer utilizes a stainless steel tank and cover.

ISO 9001 Certified

Standard Features:

- A 400 CB stainless steel tank with all seams welded. Each unit is pressure-tested and inspected for leaks prior to shipment.
- Equipped with two (2) universal, high-voltage bushing wells for loop feed
- Parking stand between the two (2) primary bushings for attachment of bushing accessories
- Welded-in stud, low-voltage bushings with threaded studs for use with copper or aluminum connectors
- Stainless steel ground pads near each bushing
- All single phase transformers are supplied with:
    - Two (2) lifting lugs
    - Oil level/fill plug
    - Oil drain plug
    - Oil level sight gauge
    - Self-actuating, pressure-relief device
- Sealed tank construction
- Welded-on cover
- Nameplate
- Durable, corrosion-resistant paint finish

Options and Accessories:

- An oil-immersed, bayonet-type fuse link removes the transformer from the system in case of an internal fault, secondary short, or overload.
- Secondary connections:
    - Copper studs with contact nuts (standard)
    - Copper studs with rotatable spades
- Copper windings
- Miscellaneous
    - External tap changer
    - 304 stainless steel tank

Specifications:

- Ratings @ 55° C Rise
  Although the insulation is 65° C temperature rise, an actual full-load temperature rise of 55° C maximum allows additional capacity for temperature differentials between vault-type and above-ground installations per IEEE standards.
- 60 Hz standard, 50 Hz optional

kVA	HV	BIL	LV
25, 37.5, 50, 75, 100, 167	4160GY/2400 – 24,940GY/14,400 V	60, 75, 95, 125 kV	240/120, 480/240, 277 V

Design Dimensions

(All dimensions are approximate. Dimensions may change to meet specific customer requirements.)

kVA	A Inches (mm)	B Inches (mm)	C* Inches (mm)	D Inches (mm)
25	29 (745)	26 (661)	33 (845)	28 (720)
37.5	29 (745)	26 (661)	33 (845)	28 (720)
50	29 (745)	26 (661)	33 (845)	30 (771)
75	31 (791)	28 (705)	36 (907)	33 (847)
100	31 (791)	28 (705)	36 (907)	38 (974)
167	32 (824)	29 (738)	37 (935)	42 (1076)

*C Dimension = Diameter

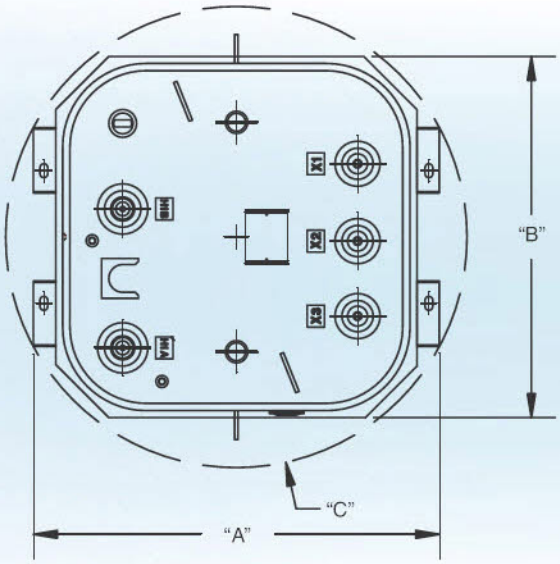

Front View

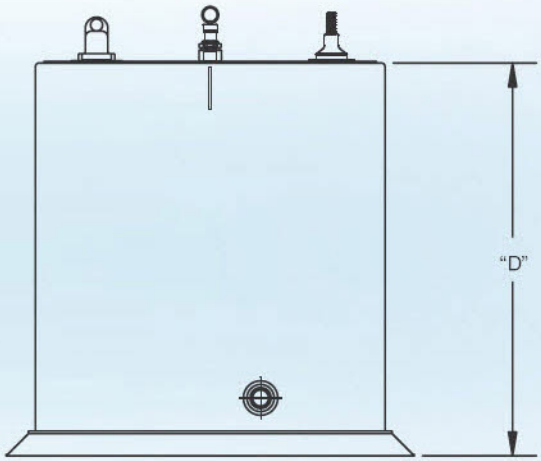

Side View